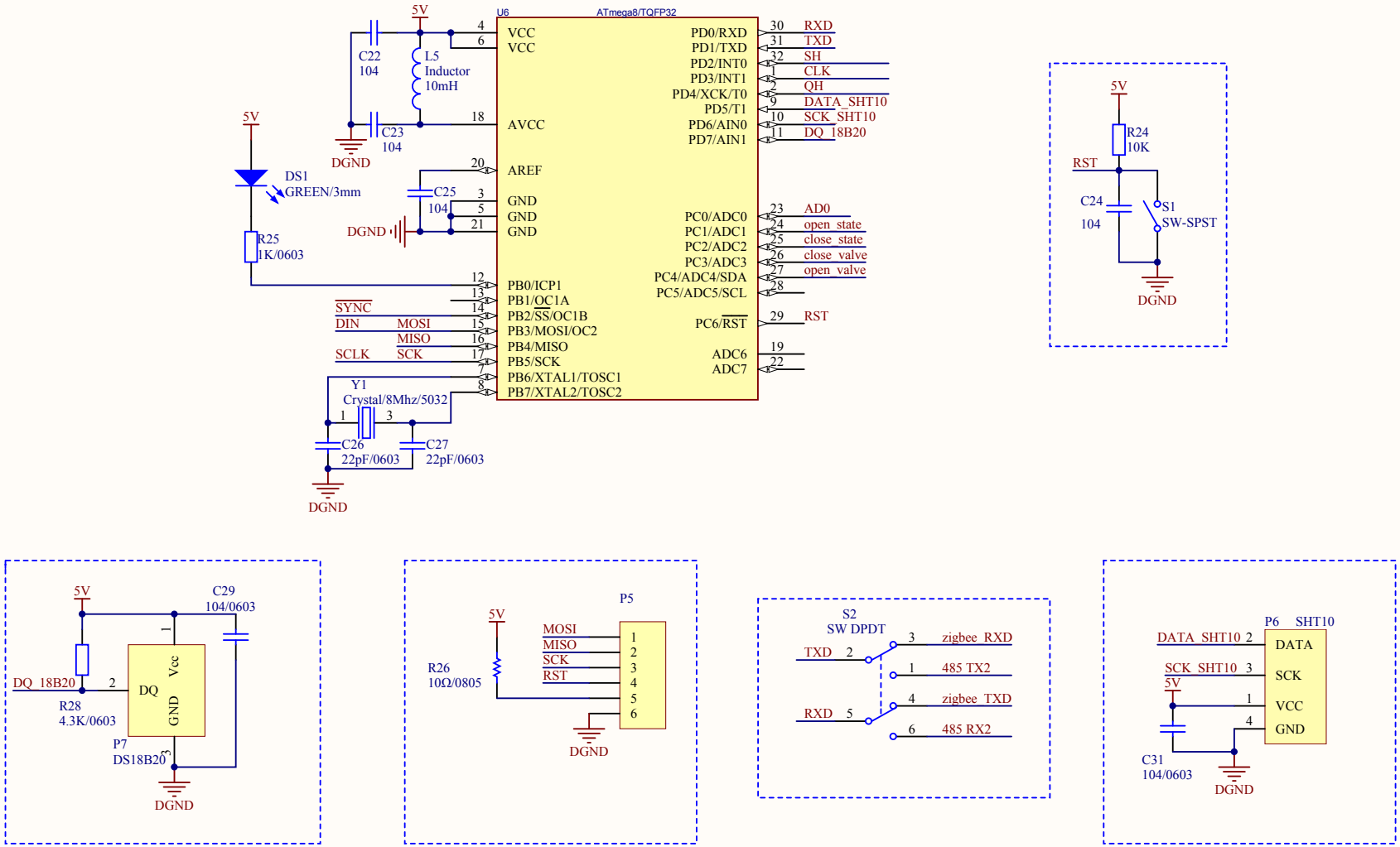

Title		
Size A4	Number	Revision
Date: 2019/4/20	Sheet of	
File: F:\ \..\ATmega8 .Schdoc	Drawn By:	